SORAA LED MR16
7.5W

OUTPUT RANGE: VIVID SERIES	390-455 lumen; CRI-95, R9>90
OUTPUT RANGE: BRILLIANT SERIES	475-525 lumen; CRI-80
BEAM ANGLE RANGE	10°, 25°, 36°
COLOR TEMPERATURE RANGE	2700K, 3000K, 4000K, 5000K
APPLICATION	Halogen replacement for indoor & outdoor applications

GaN on GaN™ TECHNOLOGY

POINT SOURCE OPTICS
Exceptional beam control enables unique 10° narrow spot and smooth uniform beams

Single light source, single crisp shadow

VP_3 VIVID COLOR AND VP_3 NATURAL WHITE
VIVID series provides accurate color rendering across the visible spectrum from 400nm to 700nm, CRI-95, R9>90

Accurate white rendering based on >70% excitation of Optical Brightening Agents with emission between 400nm & 440 nm

ENERGY EFFICIENCY AND LONG LIFE
85% more energy efficient than standard halogen lamps

Typical payback of one year or less

Rated lifetime of 35,000 hours. Three year warranty

CERTIFICATIONS
UL/CUL Class 2 and non-Class 2, FCC Title 47 Part 15B, RoHS, CE

HIGHLY COMPATIBLE
Narrow spot compatible with Soraa SNAP System accessories

Thermally and geometrically compatible with standard fixtures

Suitable for fully enclosed fixtures per UL 1993. Can be used with front glass cover

Suitable for damp locations per UL

Works with trailing edge and leading edge phase cut dimmers, 12V AC magnetic and electronic transformers and 12V DC transformers (see www.soraa.com/resources)

INTENDED USE AND APPLICATIONS
Intended for use in MR16 compatible recessed downlights, track lighting and other indoor and outdoor applications

Soraa lamps are designed to safely turn down in any thermal environment not conducive to minimum airflow or proper ventilation

GENERAL SPECIFICATIONS

Form Factor

Width: 50.1mm (1.97")

Height: 45.5mm (1.79")

Weight: 47g

Operating Temperature

Minimum: -40°C (ambient)

Typical: 75°C - 85°C (base)

Maximum: 95°C (base)

Electrical

Wattage: 7.5W

Power factor: 0.92

Voltage: 12V +/- 1.2V

Dimmable to < 20%

COLOR RENDERING

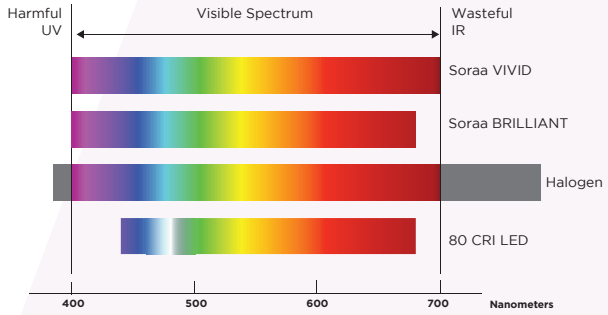

DIMENSIONS

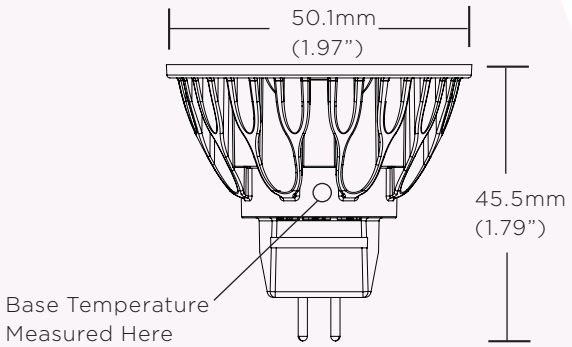

Soraa Inc. 6500 Kaiser Drive, Suite 110, Fremont, CA 94555
855 GO-SORAA / 855 467-6722 www.soraa.com

SORAA LED MR16 7.5W

BEAM DIAGRAM

Narrow Spot 10°

Beam Dia at 50% CBCP (ft)	Field Dia at 10% CBCP (ft)	Foot-candles (% of CBCP)
0.5	1.1	11.1%
1.0	2.1	2.8%
1.6	3.2	1.2%
2.1	4.2	0.7%
2.6	5.3	0.4%

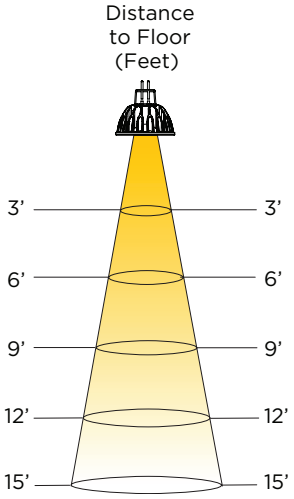

Narrow Flood 25°

Beam Dia at 50% CBCP (ft)	Field Dia at 10% CBCP (ft)	Foot-candles (% of CBCP)
1.3	2.2	11.1%
2.7	4.4	2.8%
4.0	6.6	1.2%
5.3	8.7	0.7%
6.7	10.9	0.4%

Flood 36°

Beam Dia at 50% CBCP (ft)	Field Dia at 10% CBCP (ft)	Foot-candles (% of CBCP)
1.9	3.3	11.1%
3.9	6.5	2.8%
5.8	9.8	1.2%
7.8	13.0	0.7%
9.7	16.3	0.4%

Note: Footcandles may be calculated by multiplying the CBCP of the desired model number by the percentage in the tables above

SPECIFICATIONS BY MODEL NUMBER*

Model Number	Reference Number	Product Code	CCT (K)	Beam Angle (°)	CBCP (Cd)	Halogen Equivalent** (Watts)	Total Flux (Lm)	Efficacy (Lm/W)	CRI/ R9	White Point (McA)
SORAA VIVID SERIES										
SM16-07-10D-927-03[SNAP]	MR16-50-B01-12-927-10	00919	2700	10	5710	50	390	52	95/95	3
SM16-07-25D-927-03	MR16-50-B01-12-927-25-2	00931	2700	25	2260	50	410	55	95/95	3
SM16-07-36D-927-03	MR16-50-B01-12-927-36-2	00943	2700	36	1070	50	410	55	95/95	3
SM16-07-10D-930-03[SNAP]	MR16-50-B01-12-930-10	00923	3000	10	6000	50	410	55	95/95	3
SM16-07-25D-930-03	MR16-50-B01-12-930-25-2	00935	3000	25	2400	50	435	58	95/95	3
SM16-07-36D-930-03	MR16-50-B01-12-930-36-2	00947	3000	36	1130	50	435	58	95/95	3
SM16-07-10D-940-03[SNAP]		00925	4000	10	6290	50	430	57	95/95	4
SM16-07-25D-940-03	MR16-50-B01-12-940-25	00937	4000	25	2510	50	455	61	95/95	4
SM16-07-36D-940-03	MR16-50-B01-12-940-36	00949	4000	36	1190	50	455	61	95/95	4
SM16-07-10D-950-03[SNAP]		00927	5000	10	6290	50	430	57	95/90	5
SM16-07-25D-950-03	MR16-50-B01-12-950-25	00939	5000	25	2510	50	455	61	95/90	5
SM16-07-36D-950-03	MR16-50-B01-12-950-36	00951	5000	36	1190	50	455	61	95/90	5
SORAA BRILLIANT SERIES										
SM16-07-10D-827-03[SNAP]	MR16-65-B01-12-827-10	00917	2700	10	6950	65	475	63	80/>0	3
SM16-07-25D-827-03		00929	2700	25	2760	65	500	67	80/>0	3
SM16-07-36D-827-03		00941	2700	36	1310	65	500	67	80/>0	3
SM16-07-10D-830-03[SNAP]	MR16-65-B01-12-830-10	00921	3000	10	7320	65	500	67	80/>0	3
SM16-07-25D-830-03		00933	3000	25	2900	65	525	70	80/>0	3
SM16-07-36D-830-03		00945	3000	36	1370	65	525	70	80/>0	3

*Specifications are at stable warm operating conditions (25°C ambient) **Energy Star Minimum [SNAP]SORAA SNAP System Compatible
CCT = Correlated Color Temperature CRI = Color Rendering Index (Ra-8) White Point = White Point Accuracy in McA step

SAFETY NOTE ON HEAT

Although Soraa's lamps operate at cooler temperatures than halogen lamps, it is recommended that gloves be worn when handling bare lamps that have been energized.

Information and specifications subject to change. SM16 7W Rev 1 10.09.14

Soraa Inc. 6500 Kaiser Drive, Suite 110, Fremont, CA 94555
855 GO-SORAA / 855 467-6722 www.soraa.com